Work Order ID 70782

Wednesday, June 15, 2011 9:12:07 AM

Item ID: D3121-23 **Accept** **Setup Start**

Revision ID: **Stop**

Item Name: Bearing

Start Date: 6/15/2011 **Start Qty:** 40.00 **Cust Item ID:**

Required Date: 6/22/2011 **Req'd Qty:** 40.00 **Customer:**

Reference:

Run Start

Approvals: **Process Plan:** H **Date:** 11-06-15 **Tooling:** _____ **Date:** _____

QC: _____ **Date:** _____ **SPC (Y/N):** _____ **Date:** _____ **Stop**

Sequence ID/ Work Center ID	Operation Description	Set Up/ Run Hours	Tool ID	Tool #	Plan Code	Accept Qty	Reject Qty	Reject Number	Insp. Stamp

Draw Nbr	Revision Nbr
D3121	Rev E

100 — PURCHASING — 0.00

Purchasing

Purchasing

Memo 0.00

Issue P/O: 14289 ☐Bearing as per Dwg D3121☐Possible Supplier:
SKF P/N: 61900-2Z or KML P/N: 6900-ZZ☐Material release note is required

H 11-06-15 (40)

110 — Receive & Inspect for Damage & Mat'l Certs — 0.00

Packaging

Packaging

Memo 0.00

Ensure Material Release Note is attached

11/6/20 (40)

120 — QC6- Inspect dimensions to drawing — 0.00

QC

Quality Control

Memo 0.00

Inspect diimensions as per Dwg D3121 and attached certfication Dwg Rev E

5/16/20 counts (+40)

Work Order ID 70782

Wednesday, June 15, 2011 9:12:07 AM

Item ID: D3121-23 **Accept** **Setup Start** **Stop**

Revision ID:

Item Name: Bearing

Start Date: 6/15/2011 **Start Qty:** 40.00 **Cust Item ID:**

Required Date: 6/22/2011 **Req'd Qty:** 40.00 **Customer:**

Reference:

Run Start **Stop**

Approvals: **Process Plan:** _____ **Date:** _____ **Tooling:** _____ **Date:** _____

QC: _____ **Date:** _____ **SPC (Y/N):** _____ **Date:** _____

Sequence ID/ Work Center ID	Operation Description	Set Up/ Run Hours	Tool ID	Tool #	Plan Code	Accept Qty	Reject Qty	Reject Number	Insp. Stamp
130	Identify as per dwg & Stock Location: 235	0.00				11/6/20		40	
Packaging	Memo	0.00							
Packaging									
140	QC21- Final Inspection - Work Order Release	0.00					11/6/20		
QC	Memo	0.00							
Quality Control									

MF 11-06-20

Picklist Print

Wednesday, June 15, 2011 9:12:13 AM

Work Order ID: 70782

Parent Item: D3121-23

Parent Item Name: Bearing

Start Date: 6/15/2011 **Required Date:** 6/22/2011

Start Qty: 40.00 **Required Qty:** 40.00

Comments: IPP A: 04.02.19 New Issue KJ/DS
IPP Rev:B ECN 1060 07-11-12 DD verified by:EC

Component Item ID/ Item Name	Replacement Item ID	Mfg/ Purch	Bin Item	Primary Location	Last Location	Route Seq ID	Unit of Measure	Qty on Hand	Qty per Kit	Total Qty	Qty Issued	Date Issued	Status
6900ZZ Bearing		Purchased	No			100	Each	0.0000	1	40			

SHOP COPY
RETURN TO
ENGINEERING
UNCONTROLLED
SUBJECT TO CHANGE
WITHOUT NOTICE
WORK ORDER
NO. 10782

DESIGN	DRAWN BY	DART AEROSPACE LTD HAWKESBURY, ONTARIO, CANADA	
CHECKED	APPROVED	DRAWING NO. D3121	REV. E SHEET 10 OF 10
DATE 07.11.07		TITLE BRACKET ASSEMBLY	SCALE 1:1

RELEASED 07.11.07

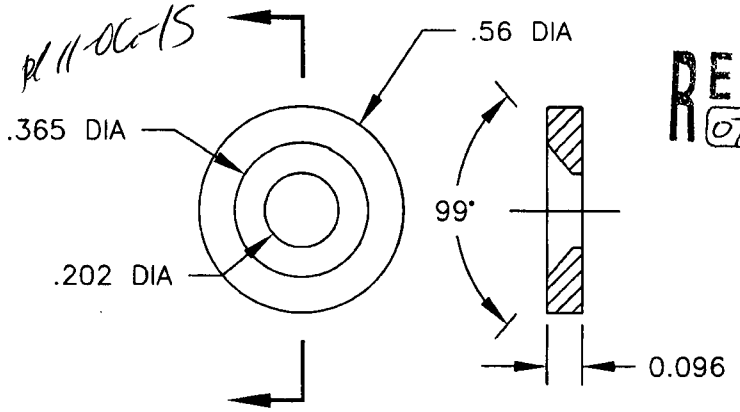

D3121-17 WASHER (SCALE 2:1)

1) REPLACES PREMIER P/N B32-23001-17
2) MATERIAL: AISI 303 SS ROUND BAR, ANNEALED (REF DART SPEC. M303R)
3) TOLERANCES ARE PER DART QSI 018 UNLESS OTHERWISE NOTED
4) ALL DIMENSIONS ARE IN INCHES
5) BREAK ALL SHARP EDGES 0.005 TO 0.015

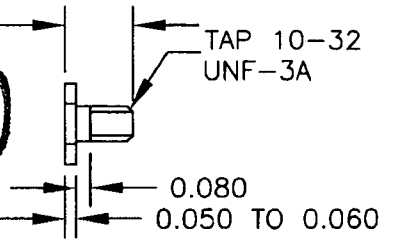

D3121-21 BOLT (SCALE 1:1)

1) MATERIAL: AISI 303 SS HEX, ANNEALED (REF DART SPEC. M303H0.500)
2) FINISH: NONE
3) TOLERANCES ARE PER DART QSI 018 UNLESS OTHERWISE NOTED
4) ALL DIMENSIONS ARE IN INCHES
5) BREAK ALL SHARP EDGES 0.005 TO 0.015

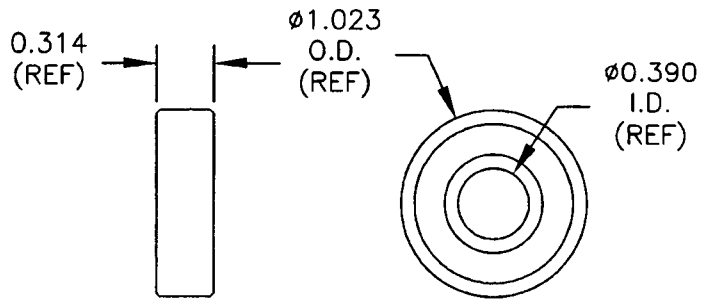

D3121-19 BEARING (SCALE 1:1)

1) POSSIBLE SUPPLIER: KING BEARING P/N 6000-2ZJ/EM FAFNIR P/N 9100KDD
2) ALL DIMENSIONS ARE IN INCHES

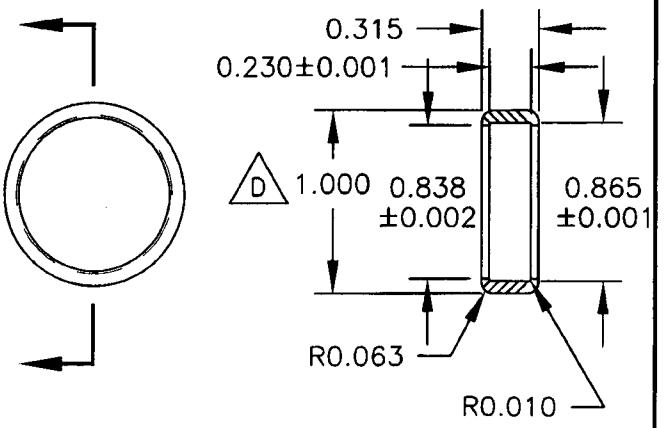

D3121-25 CAP (SCALE 1:1)

1) MATERIAL: DELRIN ROD, ø1.25 (REF DART SPEC. M-DELRIN-R1.250)
2) TOLERANCES ARE PER DART QSI 018 UNLESS OTHERWISE NOTED
3) ALL DIMENSIONS ARE IN INCHES

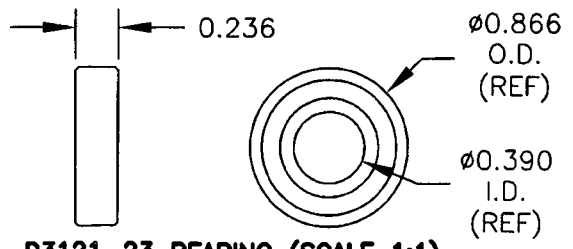

D3121-23 BEARING (SCALE 1:1)

1) POSSIBLE SUPPLIER: SKF P/N 61900-2Z OR KML P/N 6900-ZZ
2) ALL DIMENSIONS ARE IN INCHES

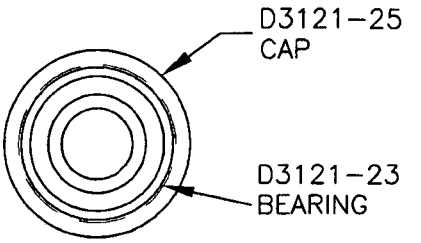

D3121-241 BEARING ASSEBLY (SCALE 1:1)

Copyright © 2002 by DART AEROSPACE LTD

THIS DOCUMENT IS PRIVATE AND CONFIDENTIAL AND IS SUPPLIED ON THE EXPRESS CONDITION THAT IT IS NOT TO BE USED FOR ANY PURPOSE OR COPIED OR COMMUNICATED TO ANY OTHER PERSON WITHOUT WRITTEN PERMISSION FROM DART AEROSPACE LTD.

Dart Aerospace Ltd

W/O:		WORK ORDER CHANGES					
DATE	STEP	PROCEDURE CHANGE	By	Date	Qty	Approval Chief Eng / Prod Mgr	Approval QC Inspector

Part No: _____ **PAR #:** _____ **Fault Category:** _____ **NCR:** Yes No **DQA:** _____ **Date:** _____

Resolution: _____ **Disposition:** _____ **QA: N/C Closed:** _____ **Date:** _____

NCR:		WORK ORDER NON-CONFORMANCE (NCR)						
DATE	STEP	Description of NC Section A	Corrective Action Section B			Verification Section C	Approval Chief Eng	Approval QC Inspector
			Initial Chief Eng	Action Description Chief Eng	Sign & Date			

NOTE: Date & initial all entries

Dart Aerospace Ltd.
1270 Aberdeen Street
Hawkesbury, ON K6A 1K7
Tel: 613 632 9577
Fax: 613 632 1053

PURCHASE ORDER

Purchase Order ID PO14289

Purchase Order Date 6/15/2011
PO Print Date 6/15/2011

Order From : VC-MAI001

MAIN INDUSTRIAL SALES LTD.
1475, TESSIER
HAWKESBURY, ON K6A 3S6
CA

Contact Name		**Buyer**	Brigitte Golden
Vendor Phone	613 632 3595	**Requisition Nbr**	
Vendor Fax	613 632 0262	**Tax Resale Nbr**	10127-2607
Vendor Account Nbr		**Terms**	Net 30
		Currency	CAD
		FOB	Destination-Collect

Ship To : DART AEROSPACE LTD 1270 ABERDEEN
HAWKESBURY, ON K6A 1K7
CANADA

Line Nbr	Reference / Revision ID / Vendor Part Number	Description/ Mfg ID	Req Date/ Taxable	Req Qty/ Unit of Measure	Ship Method	Unit Price	Extended Price
1	6900ZZ	Bearing	6/16/2011 Yes	40.00 Each	Yours ppd	$1.6200	$64.80

Special Inst: As per DWG: D3121
Rev: E
B69324

PO Total: **$64.80**

No substitution or deviation without consent.
Certificate of Conformity or Material Certification required when applicable

Change Nbr: 1 **Change Date:** 6/15/2011

MAIN INDUSTRIAL SALES LTD.

475 TESSIER ST.
AWKESBURY ON K6A 3S6
hone: (613) 632-3595 Ext. Fax: (613) 632-0262
ales@mainindustrialsales.com

Packing Slip

DATE June 16, 2011
NUMBER 0000145468
CUSTOMER NO. DART

BILL TO:

DART AEROSPACE LTD.
1270 ABERDEEN ST.
HAWKESBURY ON K6A 1K7

(613) 632-5200 Ext.

SHIP TO:

DART AEROSPACE LTD.
1270 ABERDEEN ST.
HAWKESBURY ON K6A 1K7

(613) 632-5200 Ext.

P.O. NUMBER	SALESPERSON	ORDER DATE	REQ. DATE	ORDER NUMBER
14289	EB	15-Jun-11		0000145468

F.O.B.	SHIP VIA	TERMS
F.O.B. value	PICK UP	NET 30 DAYS

PART NUMBER / DESCRIPTION	UOM	QUANTITY REQ.	SHIPPED	B.O.
0-69002ZKML KML BALL BEARING YOUR PART # : 6900ZZ	EA	40	40	

Subcontract